SPECIFICATIONS – STRM012-3

Star Freestanding Bath Mixer - Chrome

Features

- WELS 3 Star, 9L/Min
- Registration number S14838
- Made from solid brass
- With Brass Handshower
- Durable Electroplated finish
- 1yr parts and labour warranty
- 15 years replacement warranty including finish

Cleaning & Care

- Regularly clean with mild soapy water
- Do not use harsh detergents, bleach or abrasive cleaners
- The use of any unsuitable cleaning products may damage the surface
- Refer to installation guide for correct installation
- Check for any product defects prior to installation

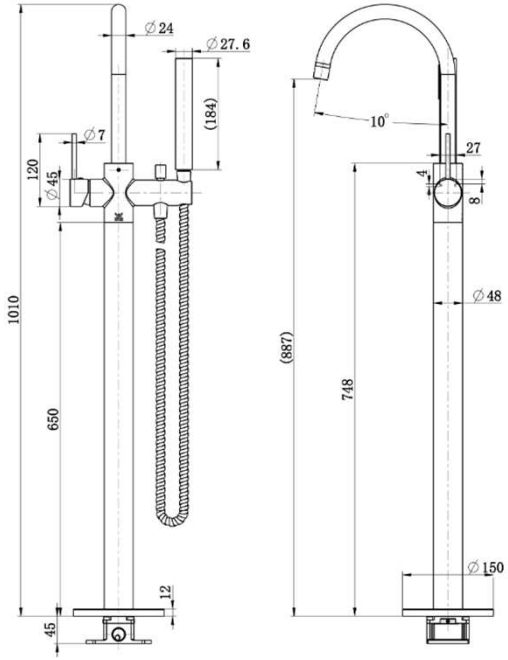

Available in

Chrome Gunmetal Matt Black