THE GABE GOOSENECK SHOWER

PRODUCT CODE: T8703

Take a shower under the stars! The Gabe Shower range offers the most beautiful shower head design, giving a luxury shower experience. With over 400 nozzles, you can look up and imagine showering under the sky full of the brightest stars. There is everything you expect from a luxury shower. With five models to suit your requirements and five colour options to suit your bathroom décor – and a Lifetime Warranty*.

FEATURES:

- / 260mm Bush Shower Head
- / Five Colour Options
- / Gooseneck arm
- / 417 Silicon Nozzles

WELS: 3 STAR 8.5 ltr/min

WARRANTY: Lifetime Warranty*

AVAILABLE FINISHES

- CHROME
- MATT BLACK
- GUN METAL
- BRUSHED GOLD
- BRUSHED NICKEL

BUSH SHOWER
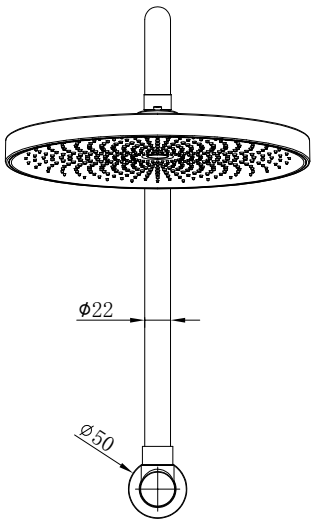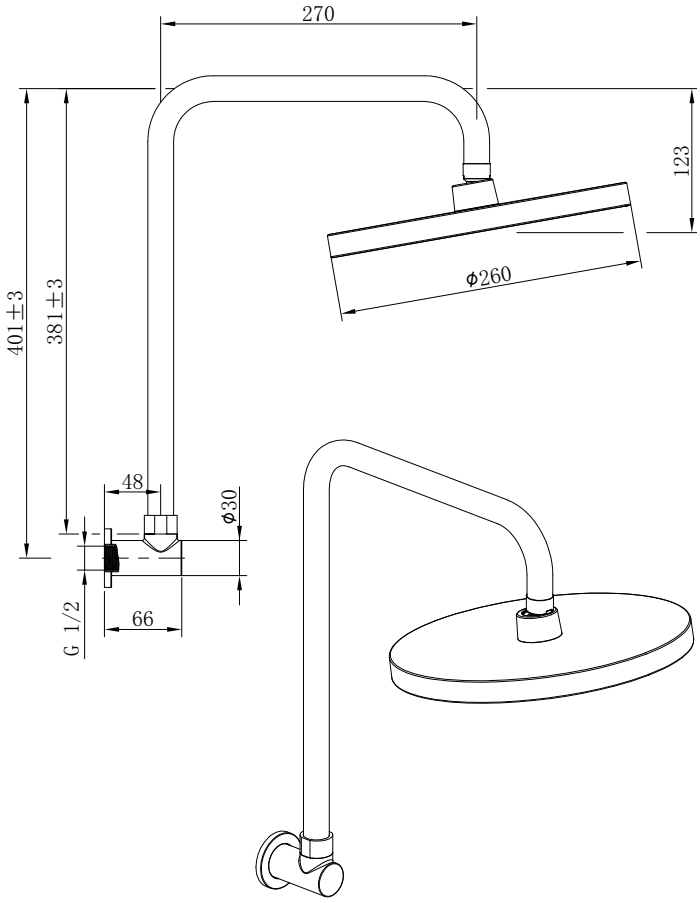
GOOSENECK SHOWER ARM