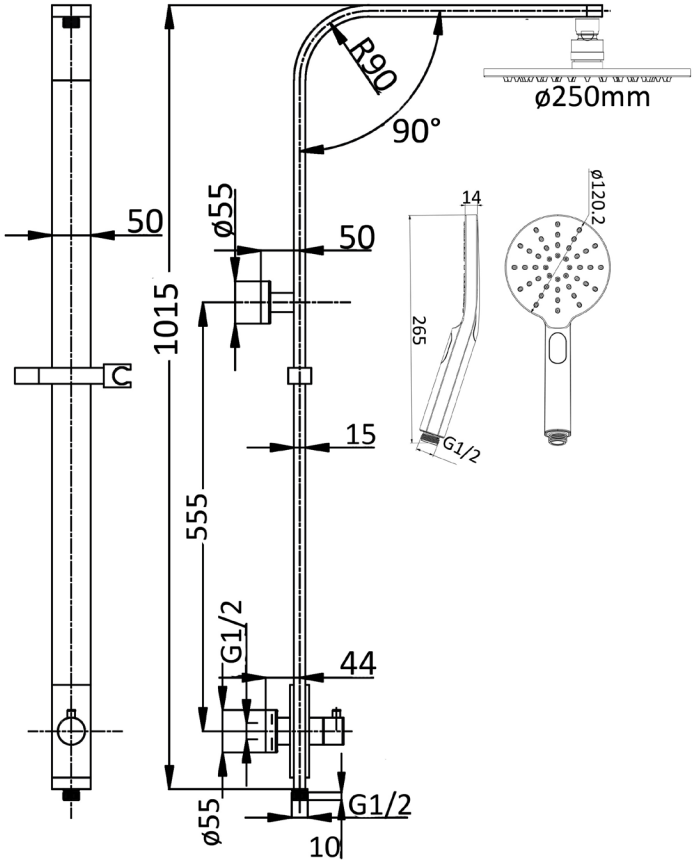

Available in

HPA11-201-BN
Brushed Nickel

HPA11-201-B
Matt Black

Kara Combo Shower Set HPA11-201

Information

Finish: Chrome
Material: Solid brass construction
- 50 x 15mm brass rail
- ø250mm brass shower Head
- 1.5m PVC hose

Function: Button press hand shower
- 3 Functions available
- Bottom diverter & water inlet
- 1/4 Turn slider

Working pressure: 150-500kpa
Operating temperature: 1°C to 70°C
WELS: 3 Star 8.5L/min (S11887)

Maintenance and Care

- Do not use harsh detergents or products that contain chloride & halides.
- Do not use abrasive, cream or citrus based cleaners or hydrochloric acid.
- Surface should be cleaned only with a mild detergent that must be rinsed off.
- It is suggested to only clean with warm water and a soft cloth.
- Damage caused by the wrong cleaning methods used will void warranty.

Please visit https://www.aclco.com.au/warranty.html to view the full warranty